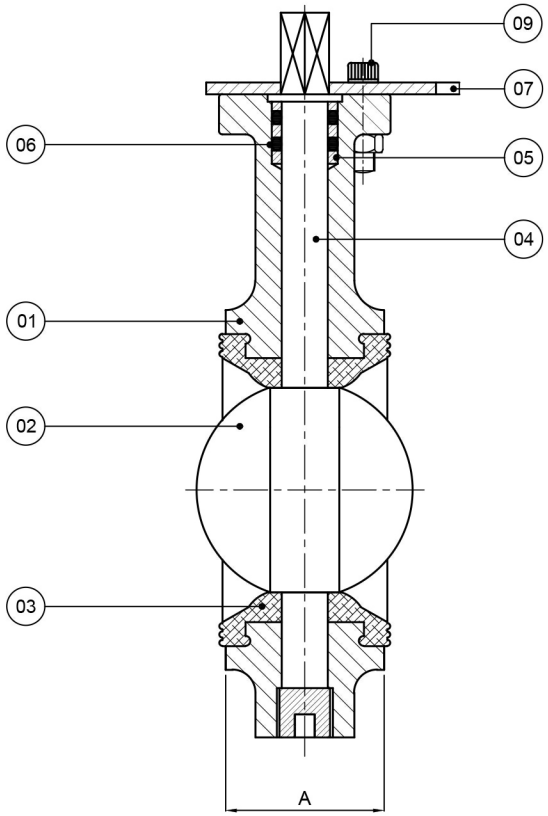

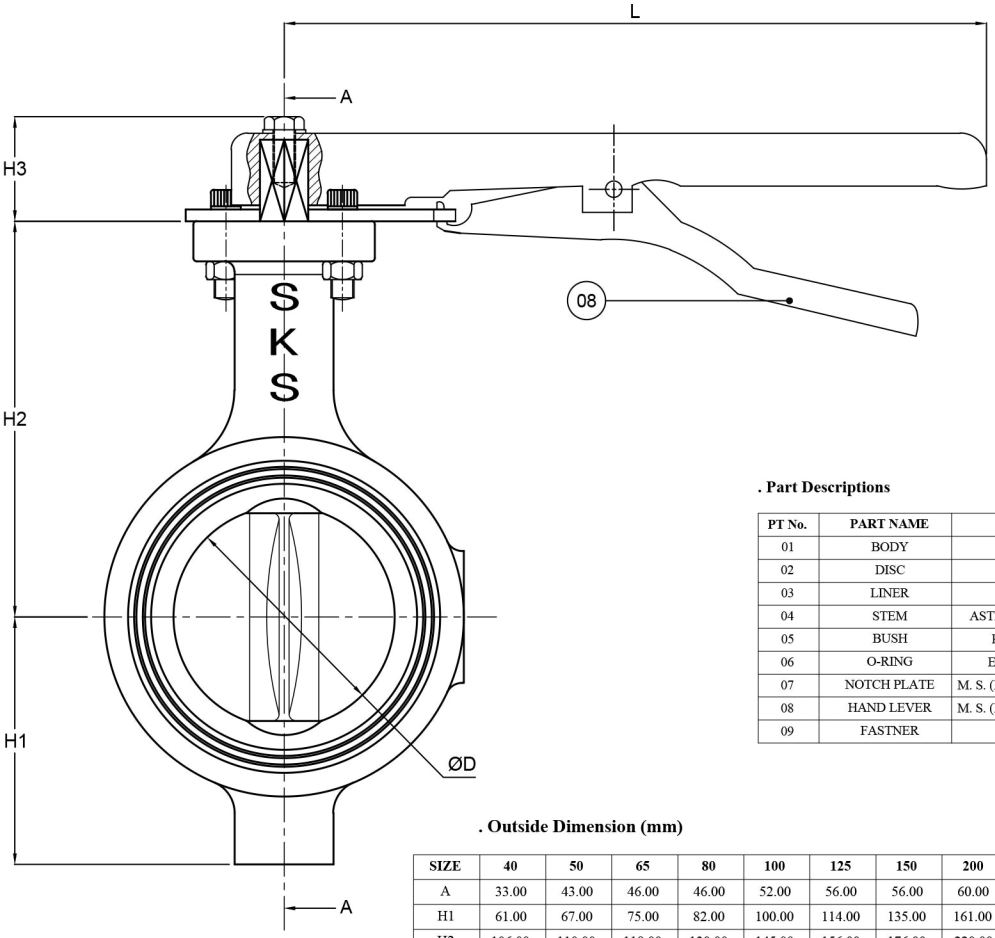

. Part Descriptions

PT No.	PART NAME	MATERIAL
01	BODY	D.I
02	DISC	SS-304
03	LINER	EPDM
04	STEM	ASTM A 276, GR SS410
05	BUSH	PTFE / NYLON
06	O-RING	EPDM / NITRILE
07	NOTCH PLATE	M. S. (POWDER COATING)
08	HAND LEVER	M. S. (POWDER COATING)
09	FASTNER	G.I.

. Outside Dimension (mm)

SIZE	40	50	65	80	100	125	150	200	250	300
A	33.00	43.00	46.00	46.00	52.00	56.00	56.00	60.00	68.00	78.00
H1	61.00	67.00	75.00	82.00	100.00	114.00	135.00	161.00	205.00	230.00
H2	106.00	110.00	118.00	130.00	145.00	156.00	176.00	220.00	280.00	305.00
H3	28.00	28.00	34.00	34.00	39.00	39.00	39.00	45.00	45.00	45.00
L	175.00	175.00	216.00	216.00	267.00	267.00	267.00	350.00	350.00	350.00
Ø D	40.50	50.50	65.00	80.00	100.00	123.00	148.50	197.00	250.50	299.50

Model No. - SKS118S4L

Standard: IS13095

Surface Finish Symbols				
	∇	∇∇	∇∇∇	∇∇∇∇
Raw (Smooth un m/cd)	Rough	smooth	Finish	Fine Finish
Ro µm	25-12.5	6.3-1.6	0.8-0.2	0.1-0.025

Machining Deviation for open Dimensions									
Dim.	Over		6	30	120	315	1000	2000	4000
	Up to & Inc.	6	30	120	315	1000	2000	4000	
Tolerance		±0.1	±0.2	±0.3	±0.5	±0.6	±1.2	±2	±3

ZONE	REV	DESCRIPTION	DATE	APPROVED	CHD. BY

REVISIONS

		Date	Name		
PIPELINE PRODUCTS (INDIA)	Drn.	19/02/2016	Er. Rahul	Material : ****	Scale : N.T.S
	Chd.	19/02/2016	Des Raj	QTY : ****	
This drawing is exclusive property of PIPELINE PRODUCTS (INDIA). It should not be reproduced in whole or in part without the written consent of PIPELINE PRODUCTS (INDIA).	Std.	19/02/2016		Raw Size : ****	
	Appd.	19/02/2016		P. Rating : PN25	Size : ****
Drg./Part Designation. **G A Drawing BFV PN25**				Drg./Part No. **1.065.01.22**	EC. No. **00**
ALL CHAMFER 0.5X45°	ALL DIMENSIONS ARE IN mm UNLESS OTHERWIES STATED.			Sheet No. 1 of 1 Sheet	